Published: 11-May-2011

Interior Trim and Ornamentation -

Torque Specifications

Description	Nm	lb-ft
Safety belt lower anchorage to seat Torx bolt	40	30
Tailgate support strut spigot	25	18
C-pillar lower trim panel Torx screw	8	6
C-pillar upper trim panel Torx screw	3	2
A-pillar trim panel Torx screw	3	2
* Safety belt anchorage Torx bolt	40	30
Foot rest nuts	10	7

*** New bolt must be fitted**

mcx30.com

Published: 11-May-2011

Interior Trim and Ornamentation - Engine CoverV6 4.0L Petrol

Removal and Installation

Removal

1. Disconnect the battery ground cable.
   For additional information, refer to: Specifications (414-00 Battery and Charging System - General Information, Specifications).
2. Remove the oil filler cap.
3. NOTE: Note the fitted position of the spacers

   Remove the engine cover.
   - Remove the 4 nuts.
   - Collect the spacers.

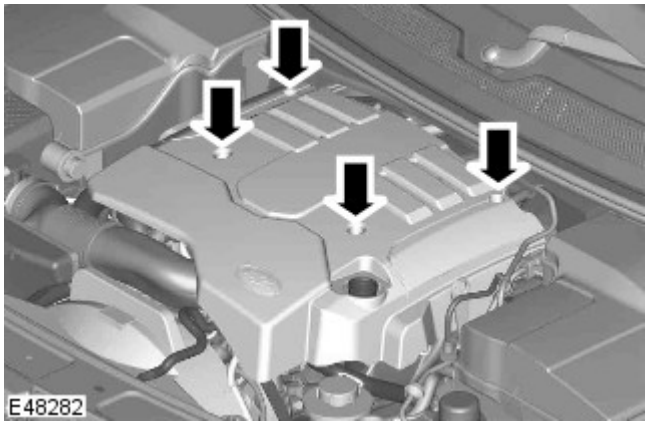

4. NOTE: Do not disassemble further if the component is removed for access only.

   Remove the acoustic pad.
   - Remove the 7 clips.
   - Remove the 4 mounts and compression limiters.

Installation

1. Install the acoustic pad.
   - Position and secure the clips.
   - Install the grommets.
   - Install the compression limiters.
2. Install the engine cover.
   - Install the spacers.
   - Tighten the nuts to 10 Nm (7 lb.ft).
3. Connect the battery ground cable.
   For additional information, refer to: Specifications (414-00 Battery and Charging System - General Information, Specifications).

mcx30.com

Published: 11-May-2011

Interior Trim and Ornamentation - Engine CoverV8 5.0L Petrol

Removal and Installation

Removal

- NOTE: Removal steps in this procedure may contain installation details.

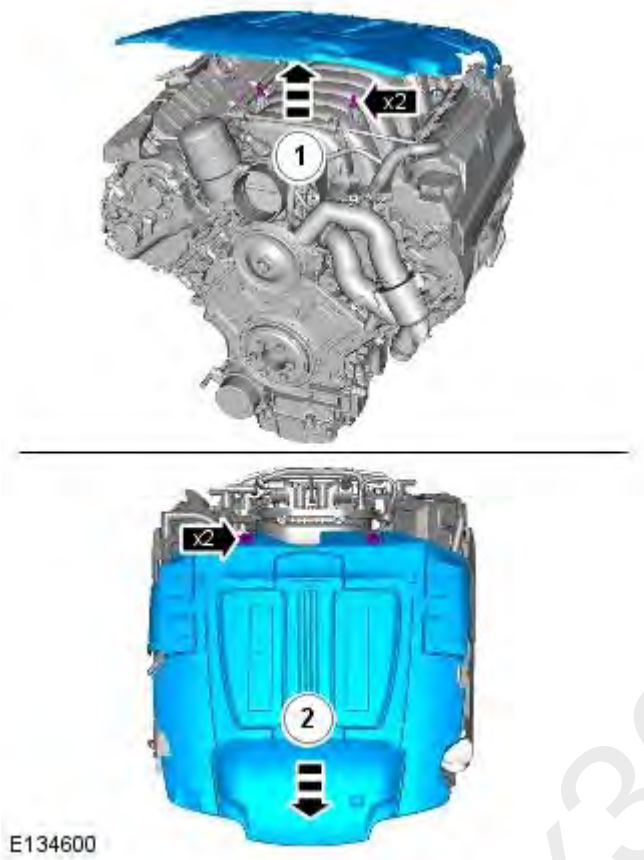

1. **1.** NOTE: Some variation in the illustrations may occur, but the essential information is always correct.

Installation

1. To install, reverse the removal procedure.

mcx30.com

Published: 11-May-2011

Interior Trim and Ornamentation - Engine Cover2.7L V6 - TdV6

Removal and Installation

Removal

1. Disconnect the battery ground cable.
   For additional information, refer to: Specifications (414-00 Battery and Charging System - General Information, Specifications).
2. Remove the engine cover.
   - Remove the oil filler cap.
   - Release the 4 clips.

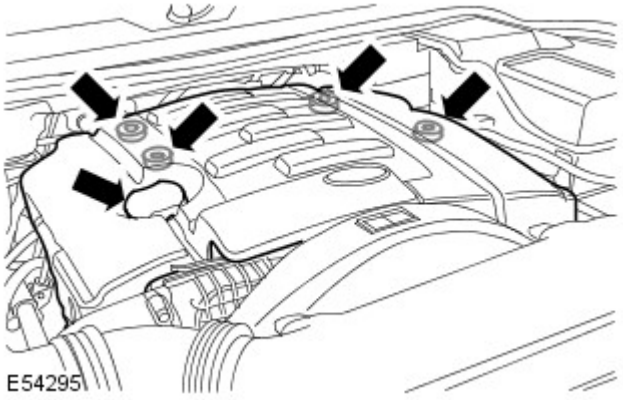

Installation

1. To install, reverse the removal procedure.

mcx30.com

Interior Trim and Ornamentation - Engine CoverTDV6 3.0L Diesel

Removal and Installation

Removal

1. Remove the oil filler cap.

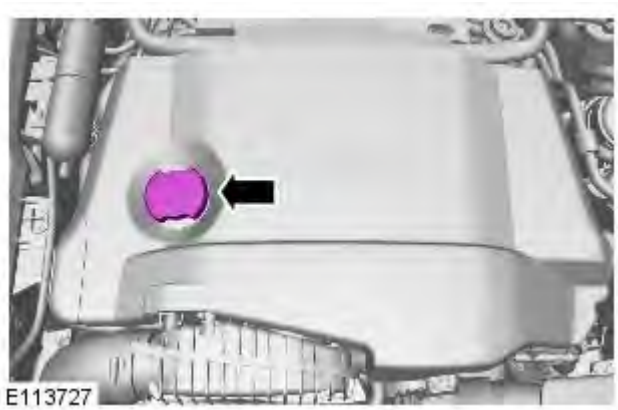

2.

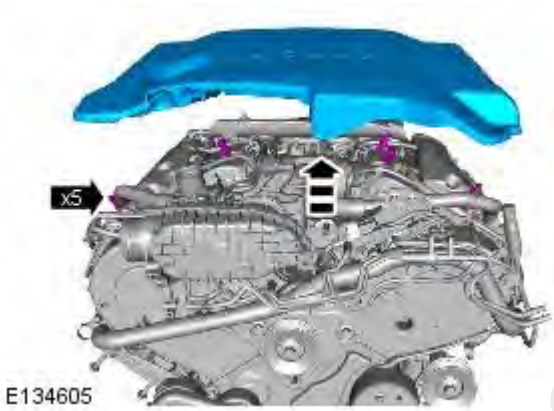

Installation

1. To install, reverse the removal procedure.

mcx30.com

Published: 16-Nov-2011

Interior Trim and Ornamentation - Rear Quarter Trim Panel

Removal and Installation

Removal

1. Fold down the rear seat backrest.
2. Release the door aperture weatherstrip.

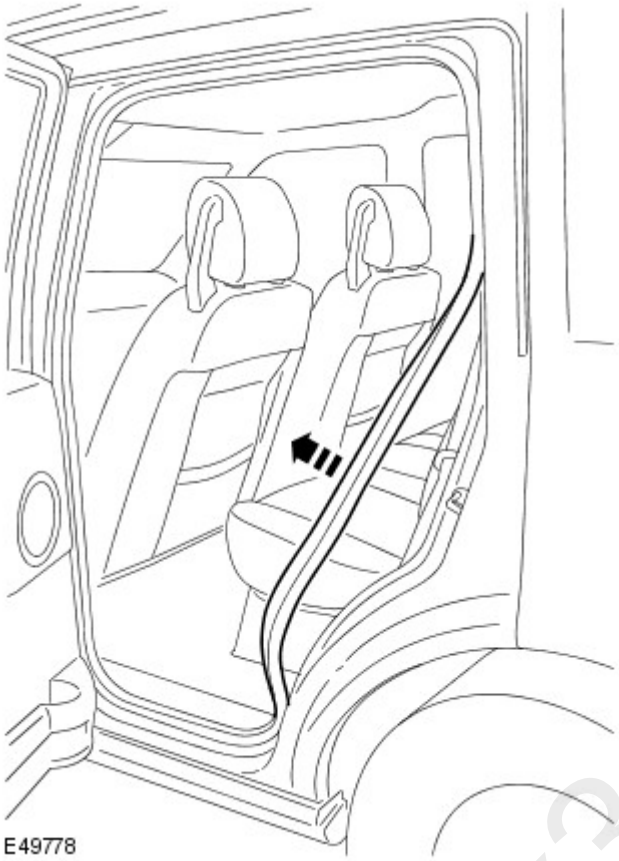

3. Release the safety belt anchor.
   - Remove and discard the bolt.

mex30.com

4. Release the tailgate aperture seal.

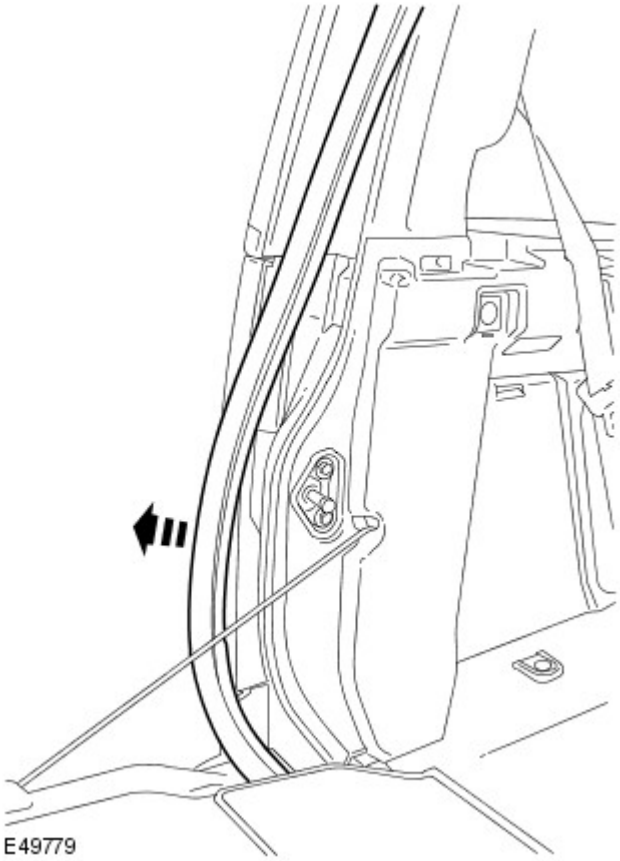

5. Remove the support spigot from the tailgate.

- Release the clip.

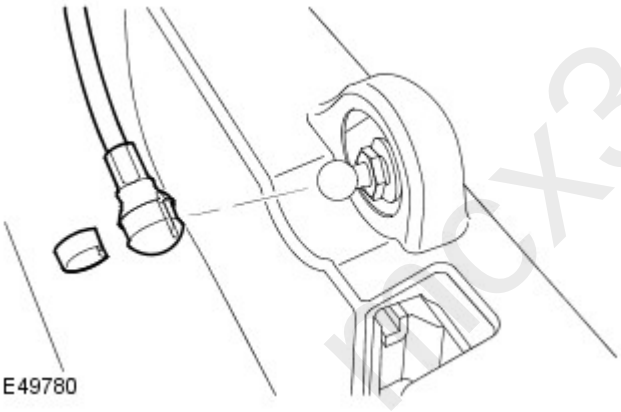

mcx30.com

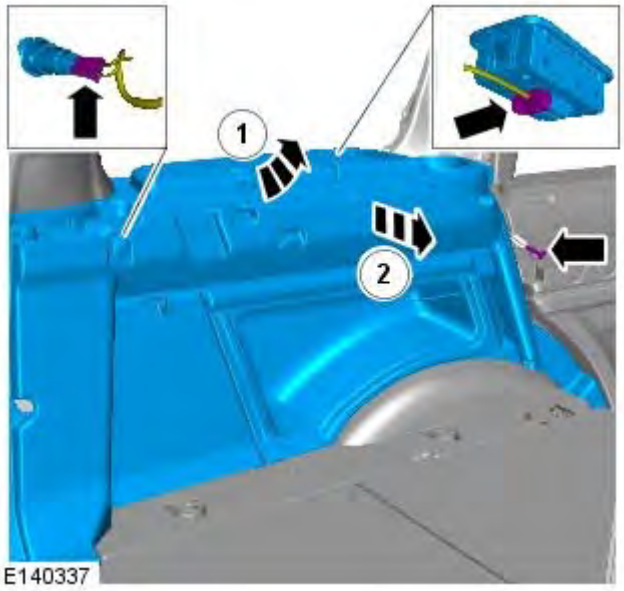

6. Remove the rear quarter trim panel.

- Remove the Torx screw.
- Lift the storage box lid and using a firm grip, release the window clips by pulling the trim inboard.
- Release the remaining 6 plastic clips using a suitable tool.
- Disconnect the 2 electrical connectors.

7. NOTE: Do not disassemble further if the component is removed for access only.

Remove the stowage tray.

- Release the cover.

8. Remove the audio control switch.

- Release the 2 clips.

9. Remove the accessory socket.

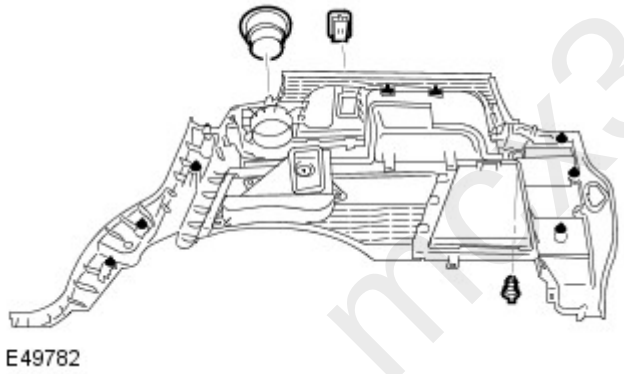

Installation

1. Install the accessory socket.

2. Install the audio control switch.

- Secure the clips.

3. Install the stowage tray.

- Install the cover.

4. Install the rear quarter trim panel.

- Install the clips.
- Tighten the Torx screw to 8 Nm (6 lb.ft).
- Connect the electrical connector.

5. Install the support spigot to the tailgate.

- Install the clip.

6. Install the tailgate aperture seal.

mcx30.com

7. Install the safety belt anchor.

- Tighten the Torx bolt to 40 Nm (30 lb.ft).

8. Install the door aperture weatherstrip.

9. Return the seat backrest to the upright position.

mcx30.com

Published: 11-May-2011

Interior Trim and Ornamentation - A-Pillar Trim Panel

Removal and Installation

Removal

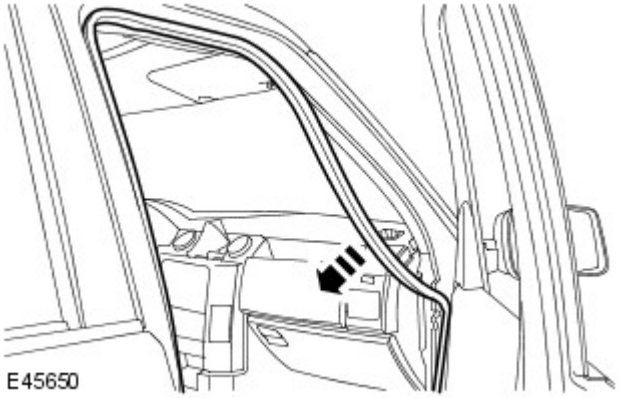

1. Release the door weatherstrip to access the A-pillar upper trim panel and instrument panel end panel.

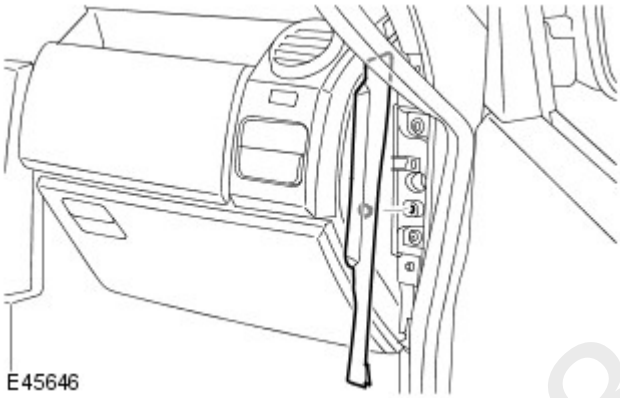

2. Remove the instrument panel end panel.
   - Release the clip.

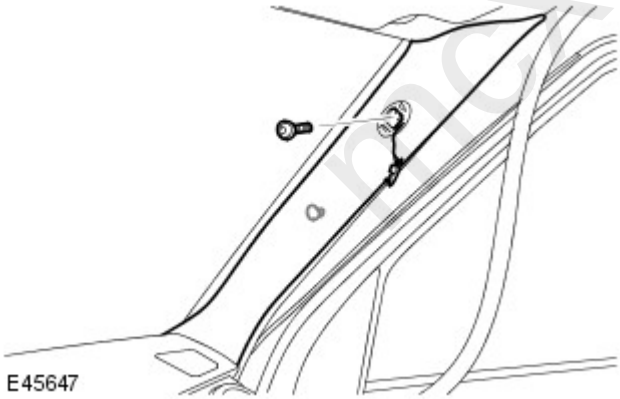

3. Remove the A-pillar upper trim panel.
   - Release the screw cover.
   - Remove and discard the Torx screw.
   - Release the clip.

4. NOTE: Do not disassemble further if the component is removed for access only.

   Remove the screw retainer and clip from the A-pillar upper trim panel.

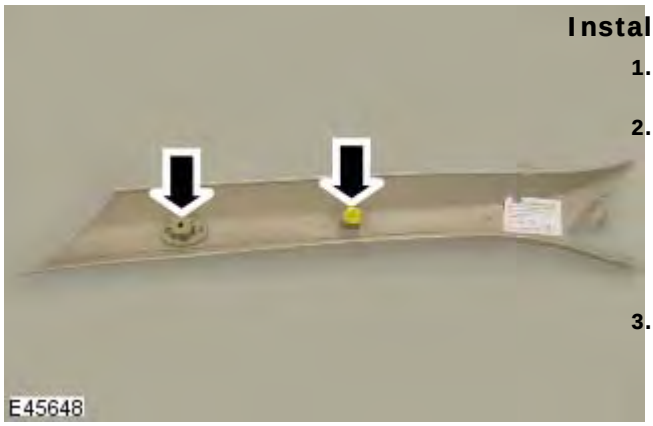

Installation

1. Install the screw retainer and clip to the A-pillar upper trim panel.
2. Install the A-pillar upper trim panel.
   - Secure with the clip.
   - Install a new Torx screw and tighten to 3 Nm (2 lb.ft).
   - Install the screw cover.
3. Install the instrument panel end panel.
   - Secure with the clip.

mgx30.com

4. Attach the door weatherstrip.

mcx30.com

Published: 11-May-2011

Interior Trim and Ornamentation - Cowl Side Trim Panel

Removal and Installation

Removal

1. Remove the front scuff plate trim panel.
   For additional information, refer to: Cowl Side Trim Panel (501-05 Interior Trim and Ornamentation, Removal and Installation).
2. Driver side: Remove the footrest trim panel bolt.
   - Remove the cover.

3. Remove the cowl side trim panel.
   - Driver side: Release the hood release lever.
   - Release from the 2 clips.

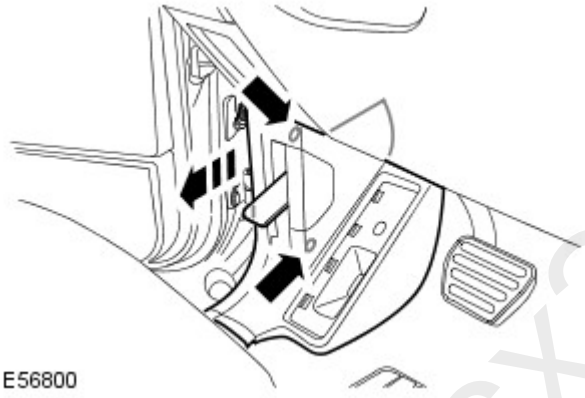

Installation

1. Install the cowl side trim panel.
   - Align the hood release lever.
   - Secure with the clips.
2. Driver side: Tighten the footrest trim panel bolt to 5 Nm (4 lb.ft).
   - Install the cover.
3. Install the front scuff plate trim panel.
   For additional information, refer to: Cowl Side Trim Panel (501-05 Interior Trim and Ornamentation, Removal and Installation).

mcx30.com

Published: 11-May-2011

Interior Trim and Ornamentation - B-Pillar Upper Trim Panel

Removal and Installation

Removal

1. Make the SRS system safe.
   For additional information, refer to: Standard Workshop Practices (100-00 General Information, Description and Operation).
2. Remove the B-pillar lower trim panel.
   For additional information, refer to: B-Pillar Lower Trim Panel (501-05 Interior Trim and Ornamentation, Removal and Installation).
3. Release the safety belt lower anchor from the seat.
   - Remove the bolt cover.
   - Passenger side, disconnect the electrical connector.
   - Remove the Torx bolt.

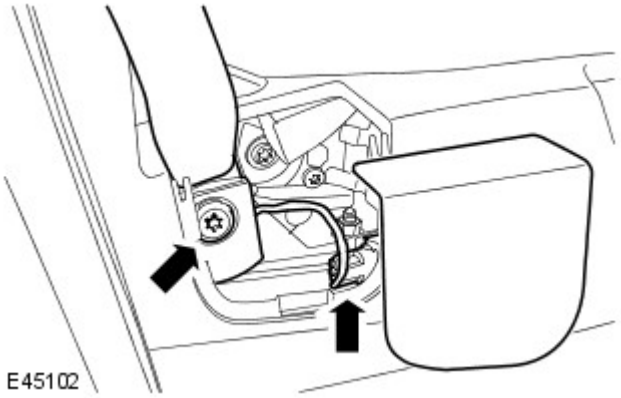

4. NOTE: Make sure the seat belt height adjuster is at its lowest point prior to removal of the B-pillar upper trim panel.

   Remove the B-pillar upper trim panel.
   - Release the front and rear door weatherstrips for access.
   - Release the 2 lower clips, then the remaining upper clip.
   - Release the safety belt.

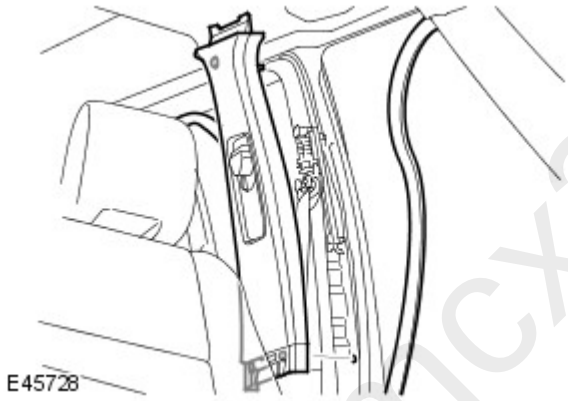

Installation

1. Install the B-pillar upper trim panel.
   - Secure with the clips.
   - Attach the safety belt.
   - Attach the door weatherstrips.
2. Attach the safety belt lower anchor to the seat.
   - Tighten the Torx bolt to 40 Nm (30 lb.ft).
   - Passenger side, connect the electrical connector.
   - Install the bolt cover.
3. Install the B-pillar lower trim panel.
   For additional information, refer to: B-Pillar Lower Trim Panel (501-05 Interior Trim and Ornamentation, Removal and Installation).

mcx30.com

Published: 11-May-2011

Interior Trim and Ornamentation - B-Pillar Lower Trim Panel

Removal and Installation

Removal

E43145

1. Remove the B-pillar lower trim panel.
   - Release weatherstrip from both sides of the B-pillar lower trim panel.
   - Release the 4 clips.

E43146

2. NOTE: Do not disassemble further if the component is removed for access only.

   Remove 4 clips from the B-pillar lower trim panel.

Installation

1. To install, reverse the removal procedure.

mcx30.com

Published: 11-May-2011

Interior Trim and Ornamentation - D-Pillar Trim Panel

Removal and Installation

Removal

1. Remove the C-pillar lower trim panel.
   For additional information, refer to: C-Pillar Lower Trim Panel (501-05 Interior Trim and Ornamentation, Removal and Installation).
2. Vehicles fitted with 7 seats: Release the seat belt.
   - Remove and discard the bolt.
3. Remove the D-pillar upper trim panel.
   - Release the 4 clips.
   - Disconnect the electrical connector.

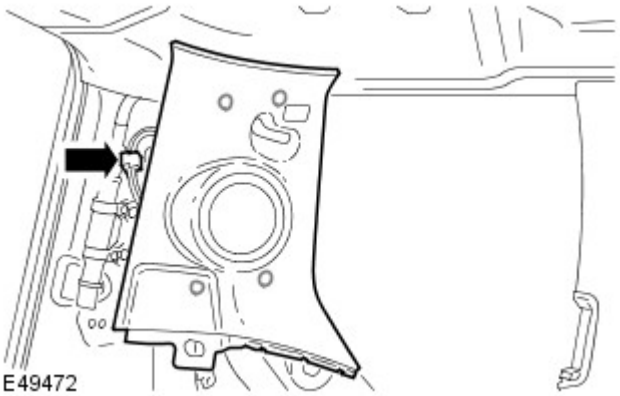

4. NOTE: Do not disassemble further if the component is removed for access only.

   Remove the speaker.
   - Remove the 3 screws.

Installation

1. To install, reverse the removal procedure.
   - Tighten the new Torx bolt to 40 Nm (30 lb.ft).

mcx30.com

Published: 11-May-2011

Interior Trim and Ornamentation - C-Pillar Lower Trim Panel

Removal and Installation

Removal

1. Fold down the rear seat backrest.
2. Release the door aperture weatherstrip.

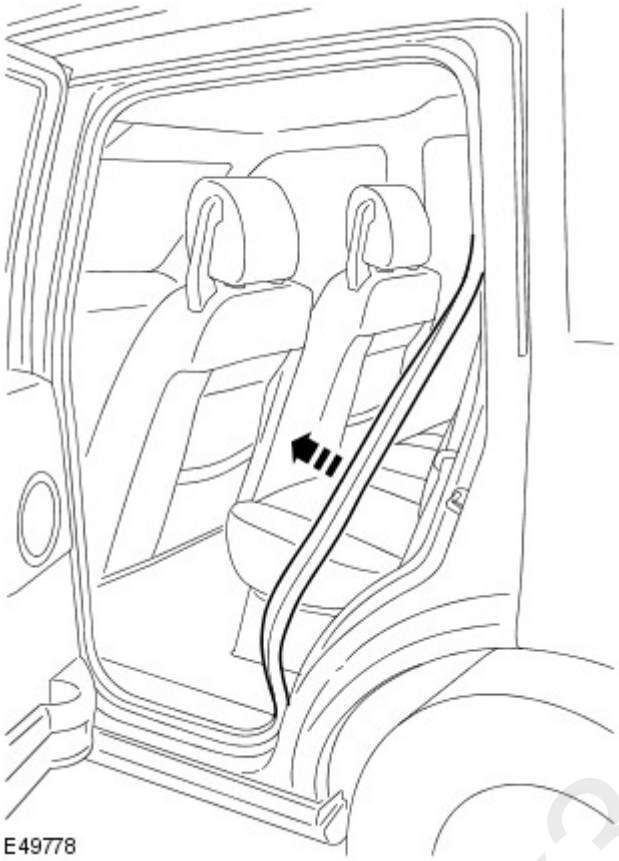

3. Release the safety belt anchor.
   - Remove and discard the bolt.

mex30.com

4. Release the tailgate aperture seal.

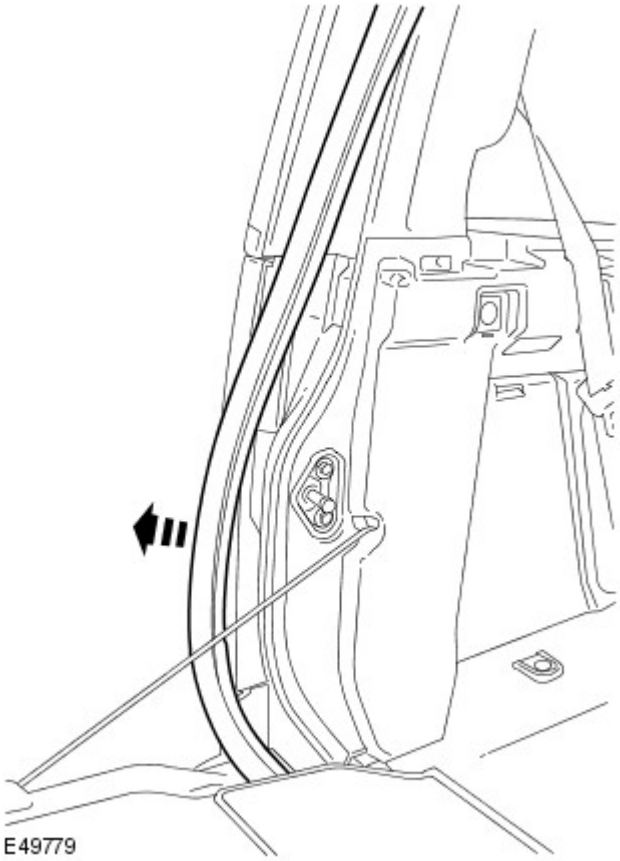

5. Remove the support spigot from the tailgate.

- Release the clip.

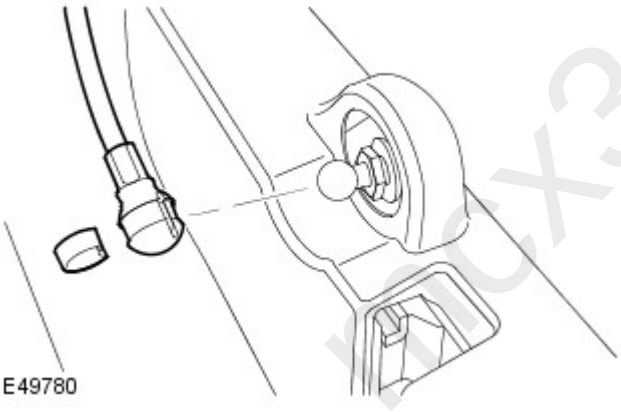

mcx30.com

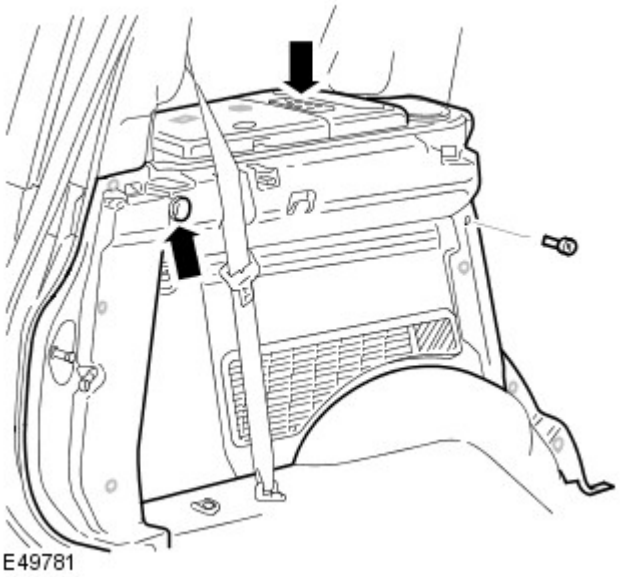

6. Remove the C-pillar lower trim panel.
   - Remove the Torx screw.
   - Release the 8 clips.
   - Disconnect the 2 electrical connectors.

7. NOTE: Do not disassemble further if the component is removed for access only.

   Remove the stowage tray.
   - Release the cover.

8. Remove the audio control switch.
   - Release the 2 clips.

9. Remove the accessory socket.

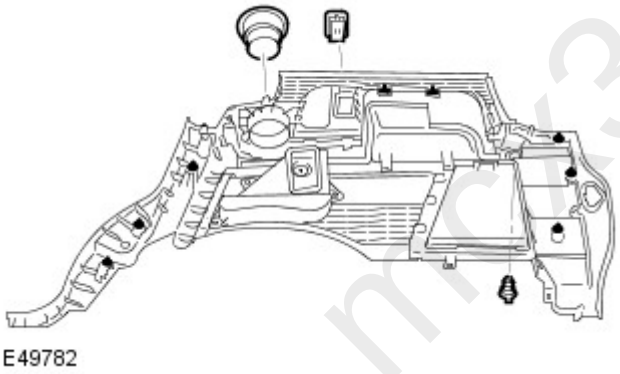

mcx30.com

Installation

1. Install the accessory socket.
2. Install the audio control switch.
   - Secure the clips.
3. Install the stowage tray.
   - Install the cover.
4. Install the C-pillar lower trim panel.
   - Install the clips.
   - Tighten the Torx screw to 8 Nm (6 lb.ft).
   - Connect the electrical connector.
5. Install the support spigot to the tailgate.
   - Install the clip.
6. Install the tailgate aperture seal.

7. Install the safety belt anchor.
    - Tighten the Torx bolt to 45 Nm (33 lb.ft).
8. Install the door aperture weatherstrip.
9. Return the seat backrest to the upright position.

mcx30.com

Published: 11-May-2011

Interior Trim and Ornamentation - C-Pillar Upper Trim Panel

Removal and Installation

Removal

1. Fold down the rear seat backrest.
2. Release the door aperture weatherstrip.
3. Release the safety belt lower anchor.
   - Remove and discard the Torx bolt.
4. Release the upper trim access cover.
5. Remove the C-pillar upper trim panel.
   - Remove and discard the Torx screw.
   - Release the 4 clips.
   - Release the safety belt from the seat.

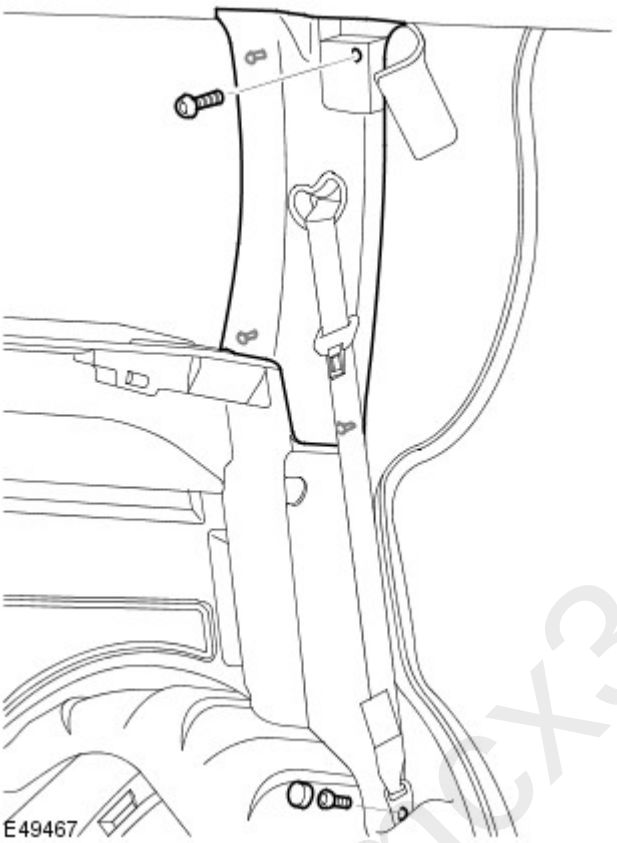

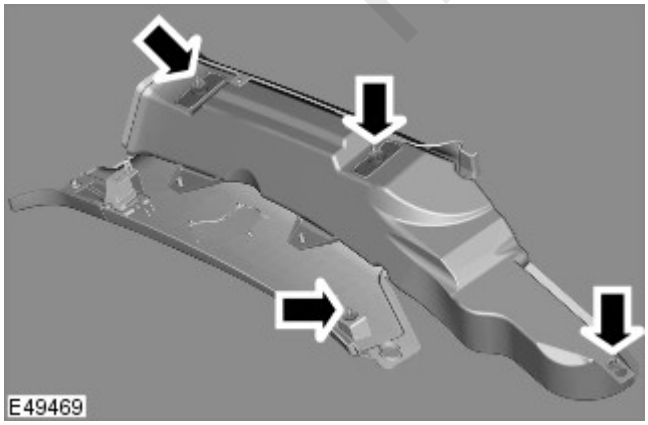

6. NOTE: Do not disassemble further if the component is removed for access only.

   Remove the 4 clips from the C-pillar upper trim panel.

Installation

1. Install the clips to the C-pillar upper trim panel.
2. Install the C-pillar upper trim panel.
   - Attach the safety belt.
   - Secure with the clips.

mex30.com

- Install a new Torx screw and tighten to 3 Nm (2 lb.ft).

3. Install the upper trim access cover.

4. Install the safety belt lower anchor.

- Tighten the new Torx bolt to 40 Nm (30 lb.ft).

5. Install the door aperture weatherstrip.

6. Return the seat backrest to the upright position.

mcx30.com

Published: 11-May-2011

Interior Trim and Ornamentation - Front Door Trim Panel

Removal and Installation

Removal

- NOTE: Removal steps in this procedure may contain installation details.
- NOTE: **Some variation in the illustrations may occur, but the essential information is always correct.**

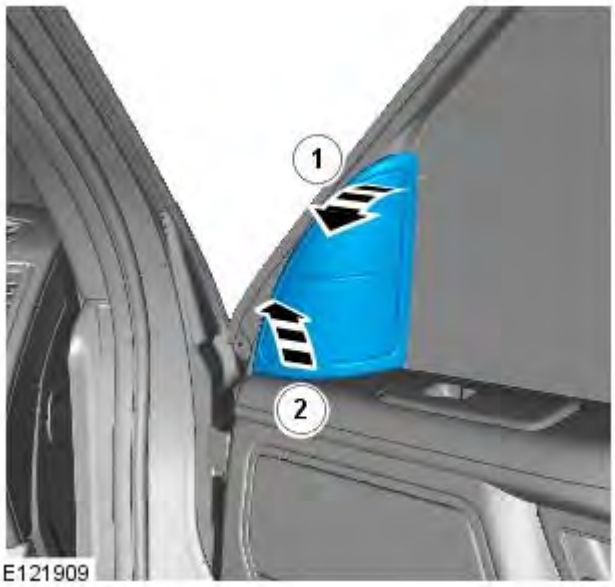

E121909

1. **1.** CAUTIONS:

   Take extra care not to damage the component.

   Make sure that the clips are correctly located.

   Disconnect the tweeter speaker electrical connector.

E126184

2.

E126207

3.

mx30.com

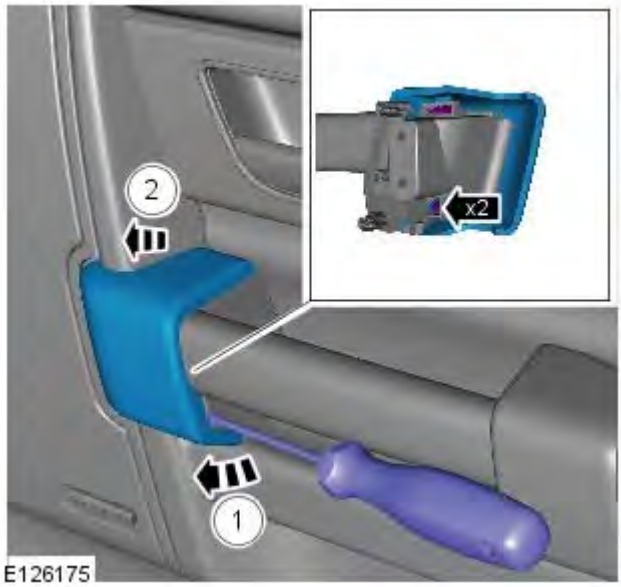

4. **4.** CAUTIONS:

Take extra care not to damage the component. Apply masking tape to the end of the screwdriver.

When removing the chrome finisher from the trim panel, make sure the components are not damaged. If necessary protect the surrounding areas using masking tape.

Make sure that the clips are correctly located.

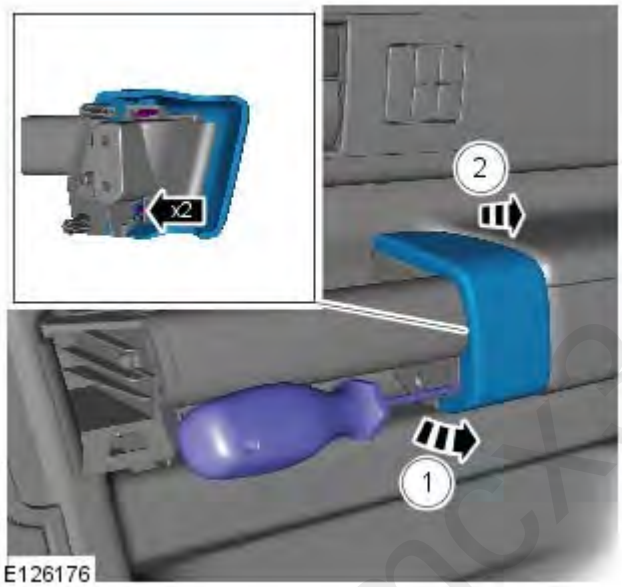

5. **5.** CAUTIONS:

Take extra care not to damage the component. Apply masking tape to the end of the screwdriver.

When removing the chrome finisher from the trim panel, make sure the components are not damaged. If necessary protect the surrounding areas using masking tape.

Make sure that the clips are correctly located.

6.

mcx30.com

7.

E126183

8.

E126185

9.

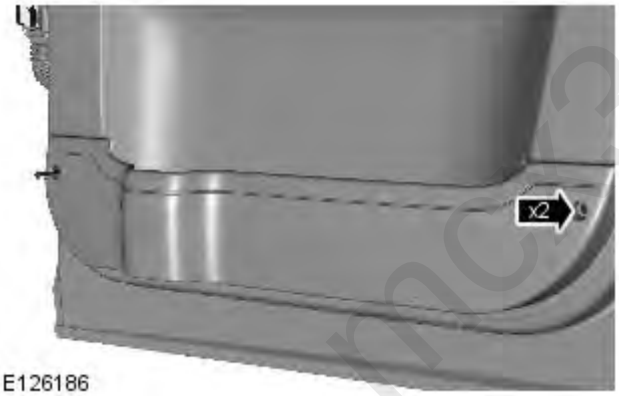

E126186

mc30.com

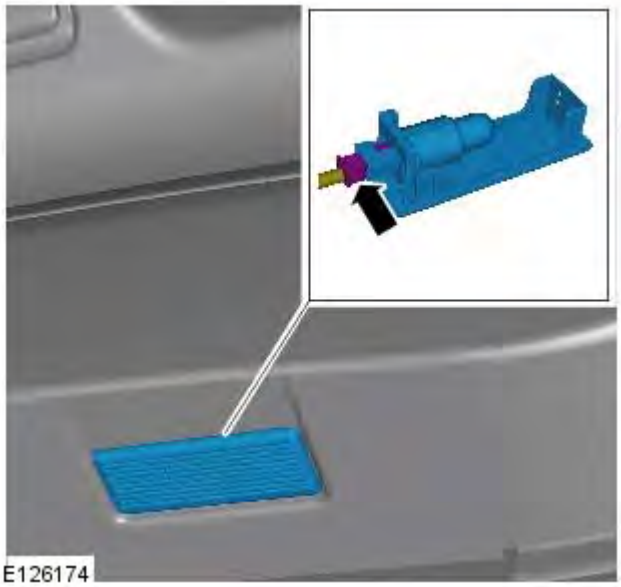
E126174

10.

E126177

11. **11.** CAUTION: Take extra care not to damage the wiring harnesses.

Detach the front door trim panel.

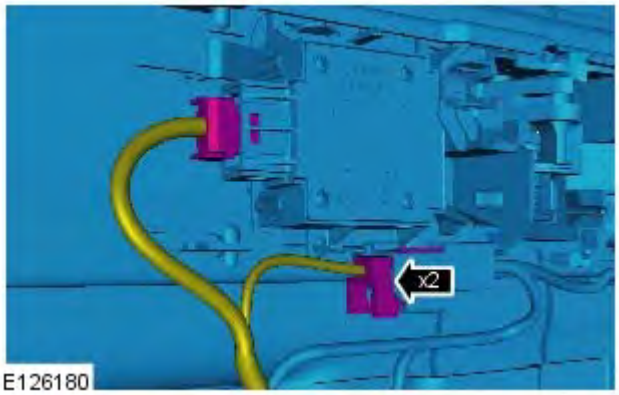

E126180

12.

ex30.com

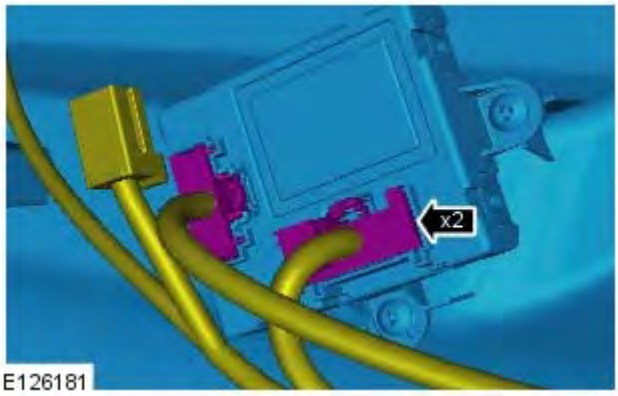

E126181

13.

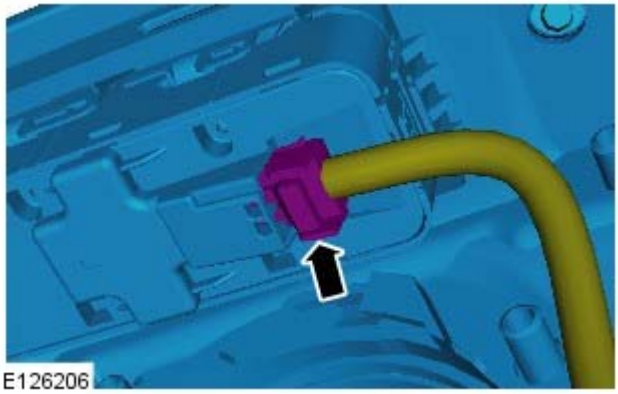
E126206

14.

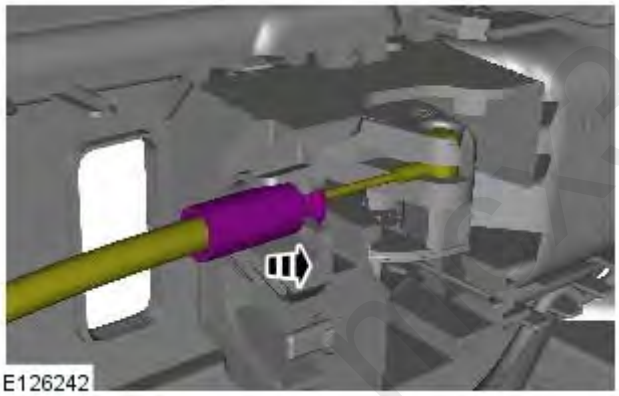
E126242

15. **15.** CAUTION: Make sure that the release cable is removed from the door trim panel using the plastic fixing and not using the cable.

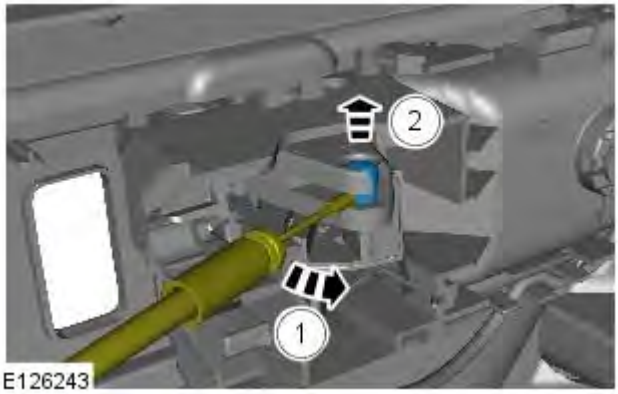

E126243

16.

17. Remove the front door trim panel.

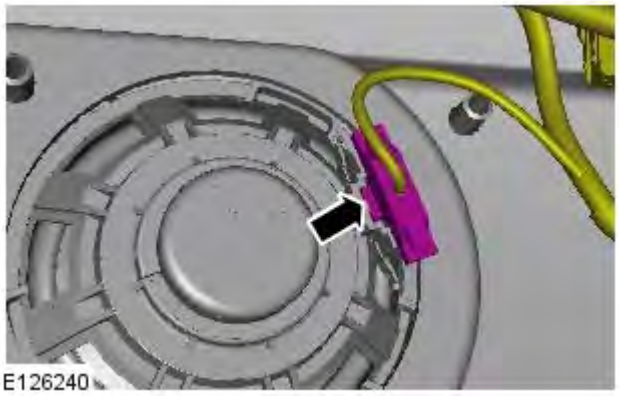

18. **18.** NOTE: Do not disassemble further if the component is removed for access only.

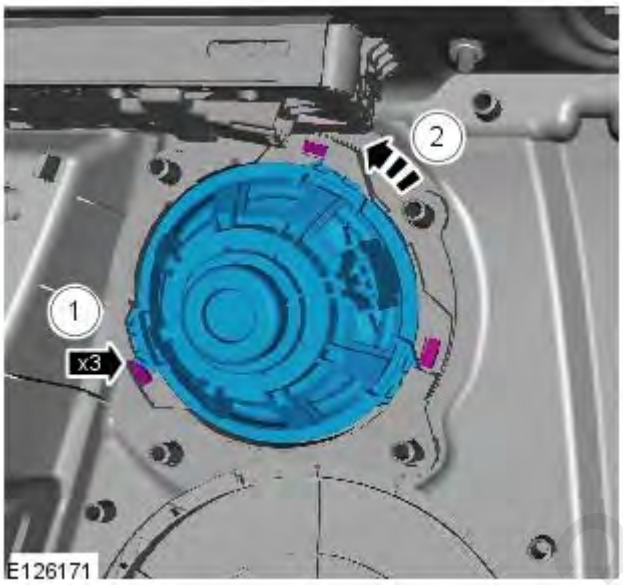

19.

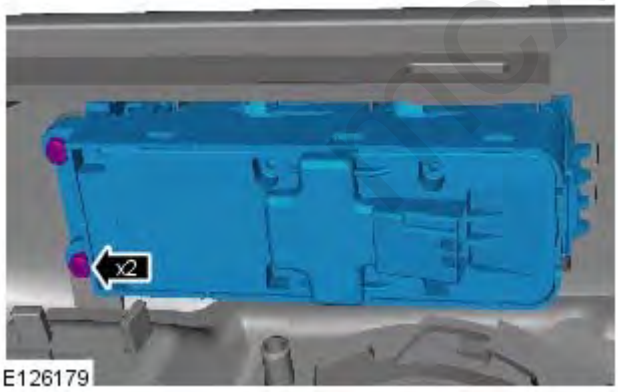

20.

mcx30.com

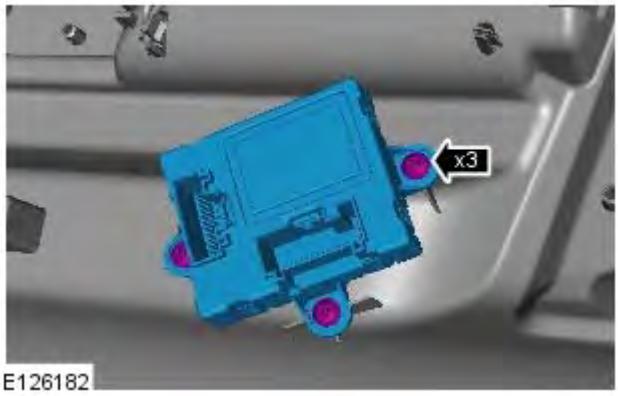

21.

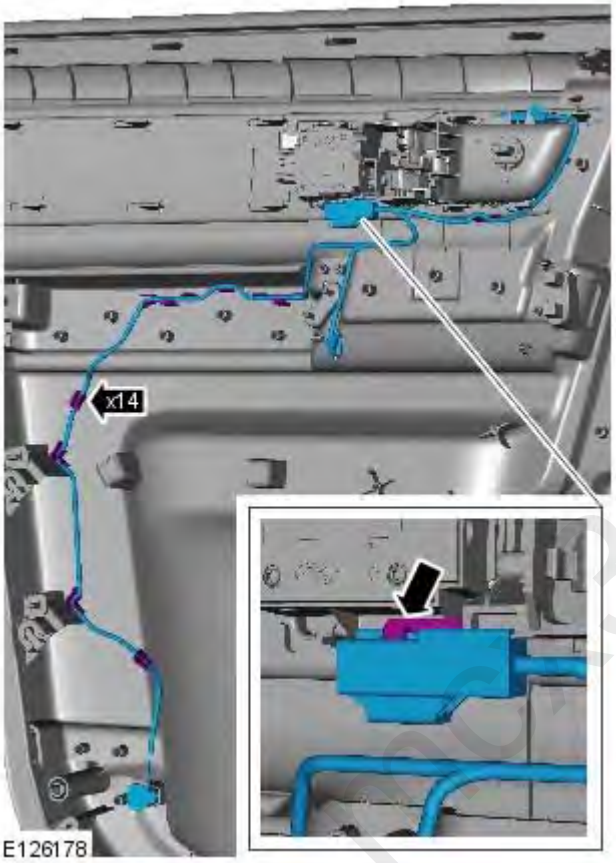

22.

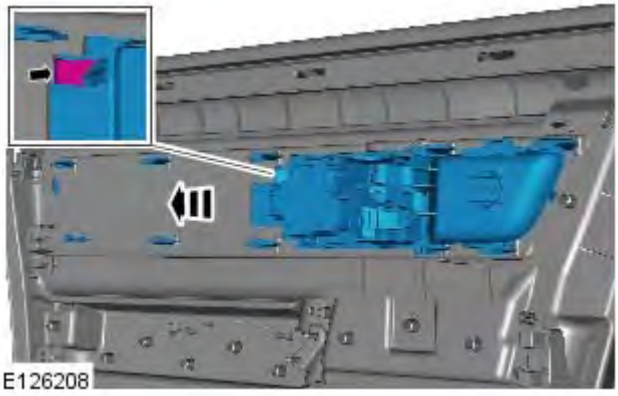

23. Release the retaining tang.

mc430.com

24.

E126172

Installation

1. To install, reverse the removal procedure.

mcx30.com

Published: 11-May-2011

Interior Trim and Ornamentation - Rear Door Trim Panel

Removal and Installation

Removal

- NOTE: Removal steps in this procedure may contain installation details.
- NOTE: **Some variation in the illustrations may occur, but the essential information is always correct.**

1.

2.

3. **3.** CAUTIONS:

Take extra care not to damage the component. Apply masking tape to the end of the screwdriver.

When removing the chrome finisher from the trim panel, make sure the components are not damaged. If necessary protect the surrounding areas using masking tape.

Make sure that the clips are correctly located.

mcx30.com

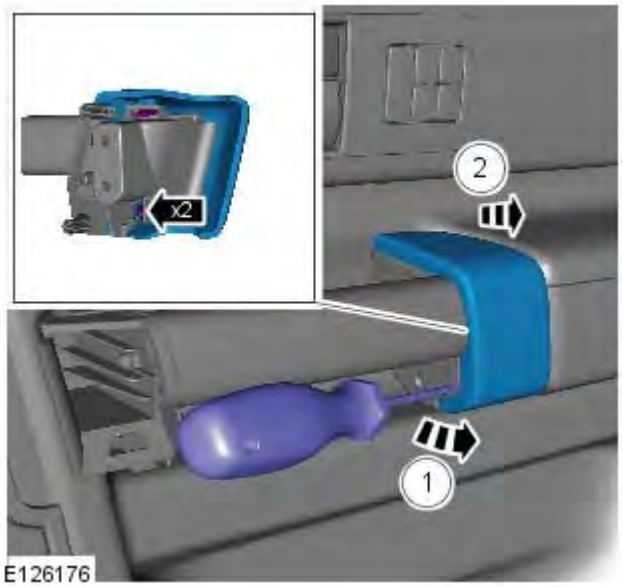

E126176

4. **4.** CAUTIONS:

Take extra care not to damage the component. Apply masking tape to the end of the screwdriver.

When removing the chrome finisher from the trim panel, make sure the components are not damaged. If necessary protect the surrounding areas using masking tape.

Make sure that the clips are correctly located.

E126173

5.

E126225

6.

mcx30.com

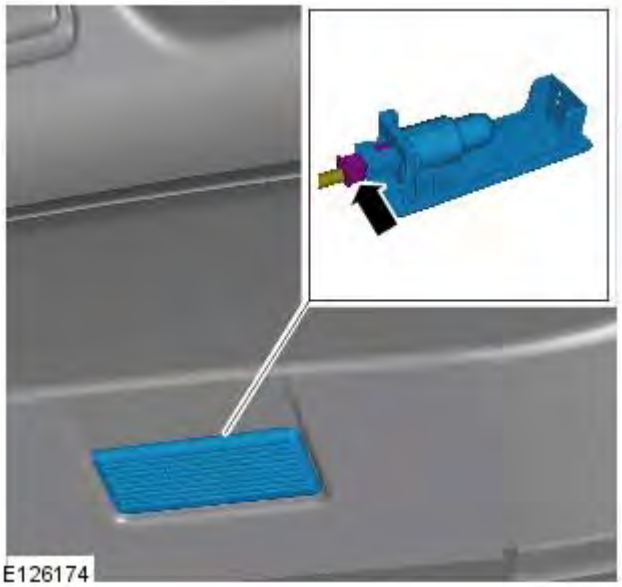

7.

8. **8.** CAUTION: Take extra care not to damage the wiring harnesses.

   Detach the rear door trim panel.

rex30.com

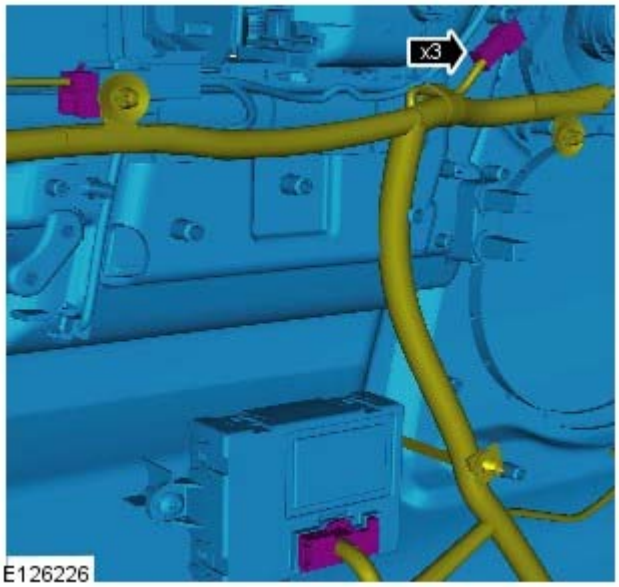

9.

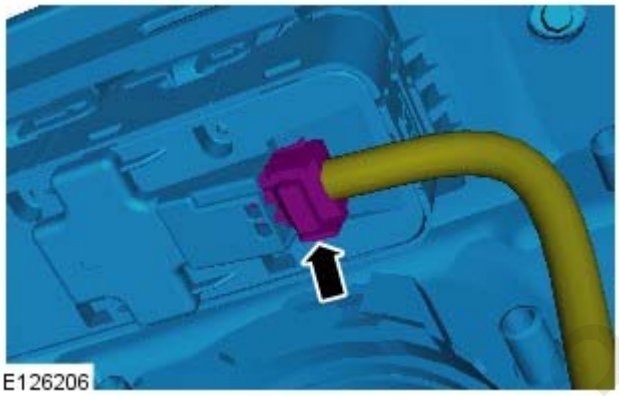

10.

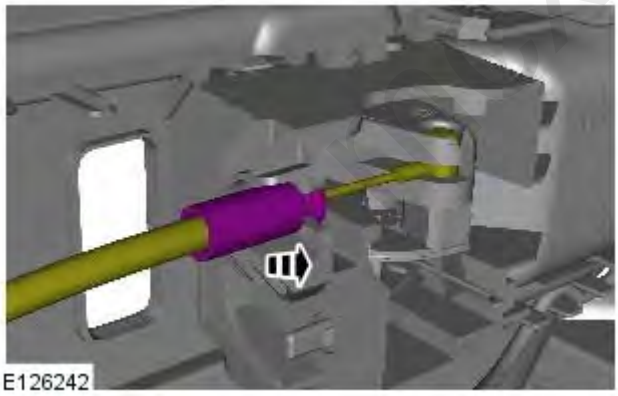

11. **11.** CAUTION: Make sure that the release cable is removed from the door trim panel using the plastic fixing and not using the cable.

x30.com

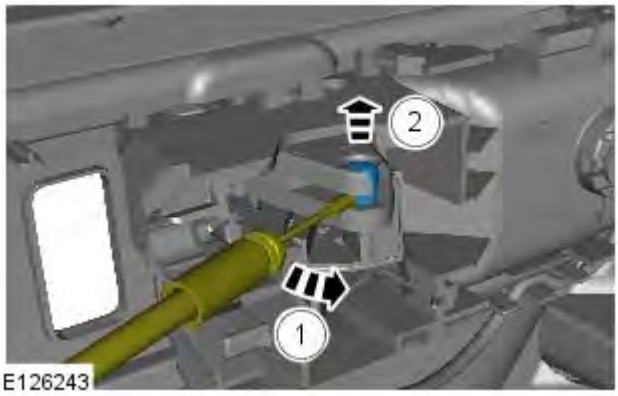

12.

13. Remove the rear door trim panel.

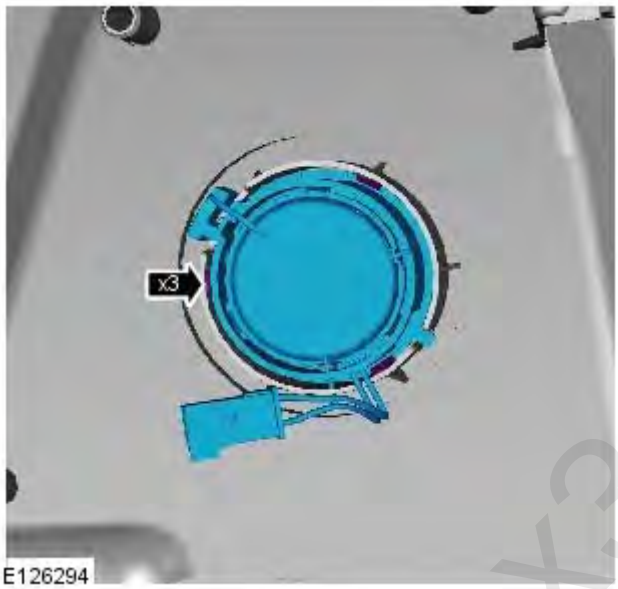

14. **14.** NOTE: Do not disassemble further if the component is removed for access only.

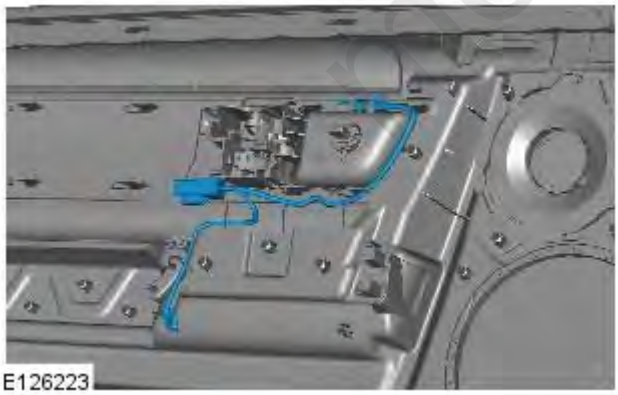

15.

jacx30.com

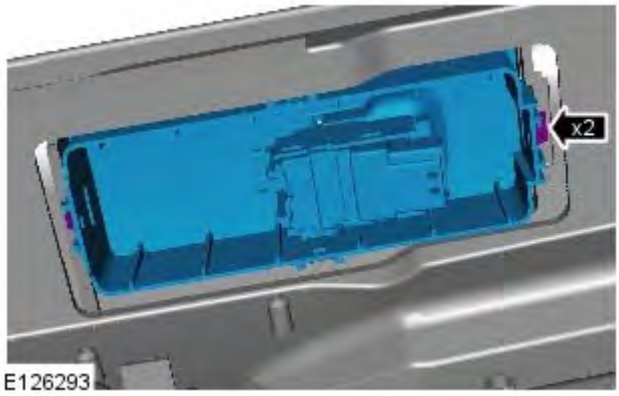

E126293

16.

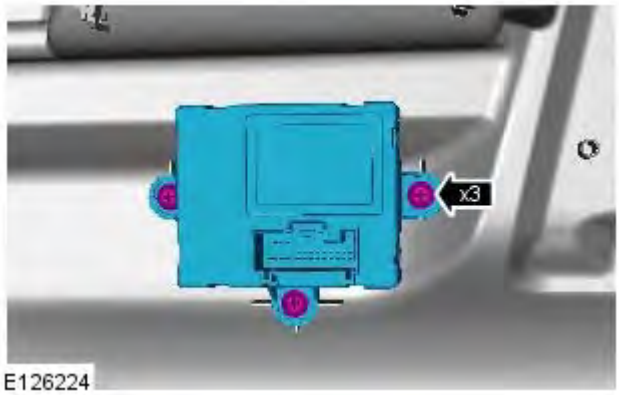

E126224

17.

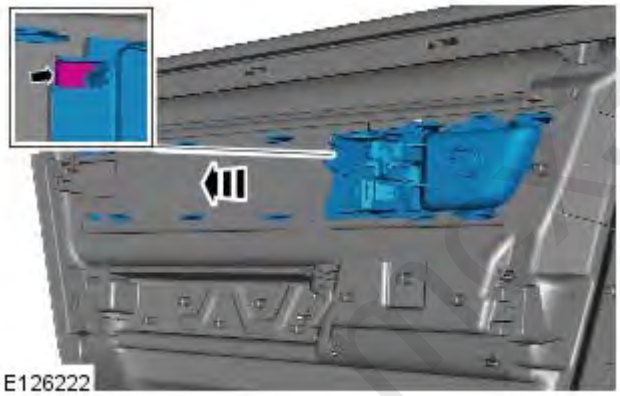
E126222

18. Release the retaining tang.

rover30.com

19.

Installation

1. To install, reverse the removal procedure.

mcx30.com

Published: 11-May-2011

Interior Trim and Ornamentation - Liftgate Trim Panel

Removal and Installation

Removal

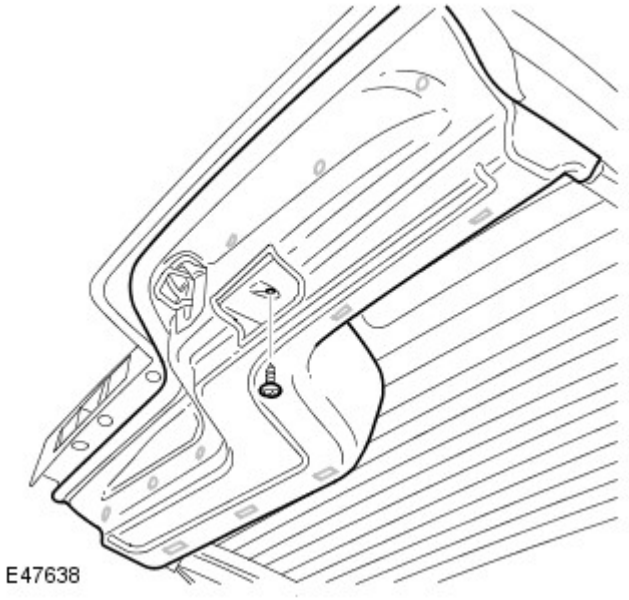

1. Remove the liftgate trim panel.
   - Remove the screw.
   - Release the 11 clips.

2. Remove the liftgate striker trim panel.

3. NOTE: Do not disassemble further if the component is removed for access only.

   Remove 6 clips from the liftgate trim panel.

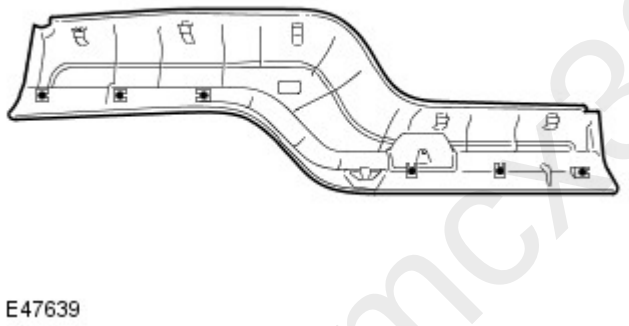

Installation

1. To install, reverse the removal procedure.

mcx80.com

Published: 11-May-2011

Interior Trim and Ornamentation - Tailgate Trim Panel

Removal and Installation

Removal

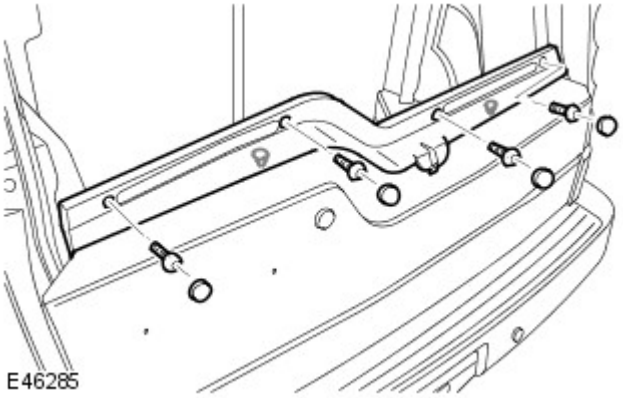

1. Remove the tailgate upper trim panel.

- Remove the 4 screw covers.
- Remove the 4 screws.
- Release the 2 clips.

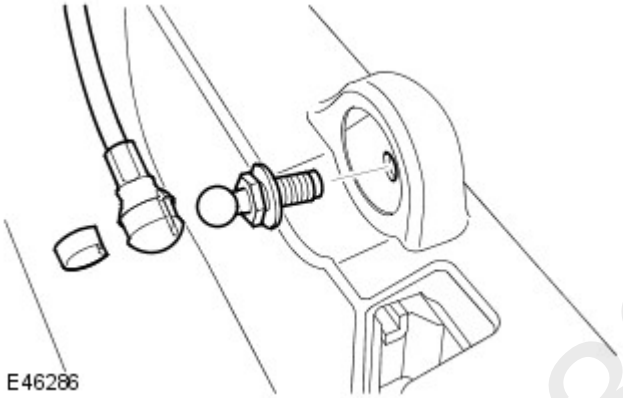

2. CAUTION: To protect the paintwork, the tailgate must be supported at all times.

Release the 2 support cables from the tailgate.

- Release the 2 clips.

3. Remove the 2 support cable spigots from the tailgate.

4. Lift the tailgate hinge cover for access.

5. Remove the tailgate trim panel.

- Release from the 12 clips.

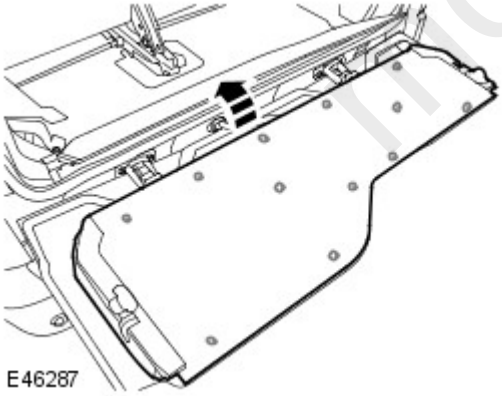

mcx30.com

6. NOTE: Do not disassemble further if the component is removed for access only.

Remove the 12 clips from the tailgate trim panel.

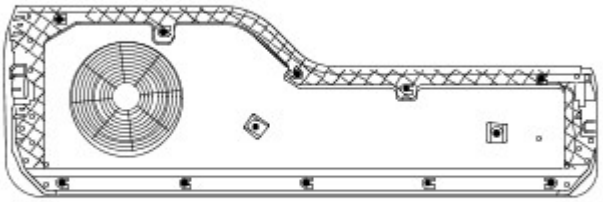

E46288

Installation

1. Install the tailgate trim panel.
   - Install the clips.
2. Lower the tailgate hinge cover.
3. Tighten the support strut spigot to 25 Nm (18 lb.ft).
4. Position the support cables to the tailgate and secure with the clips.
5. Install the tailgate upper trim panel.
   - Secure with the clips.
   - Install the screws.
   - Install the screw covers.

mcx30.com

Published: 11-May-2011

Interior Trim and Ornamentation - Scuff Plate Trim Panel

Removal and Installation

Removal

1. Remove the B-pillar lower trim panel.
   For additional information, refer to: B-Pillar Lower Trim Panel (501-05 Interior Trim and Ornamentation, Removal and Installation).
2. Release the front and rear door weatherstrips to access the scuff plate trim panel.

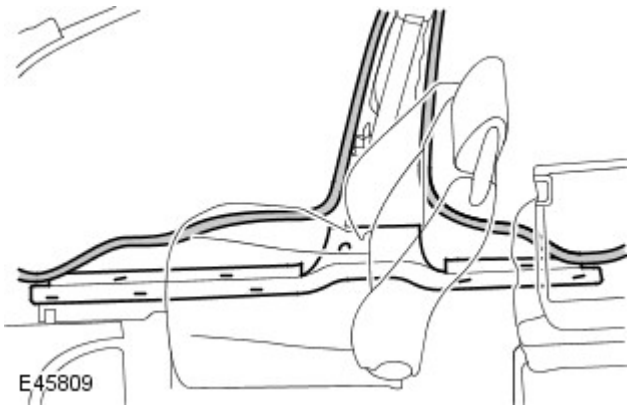

3. Remove the scuff plate trim panel.
   - Remove the 9 clips.
4. NOTE: Do not disassemble further if the component is removed for access only.

   Remove the 9 clips from the scuff plate trim panel.

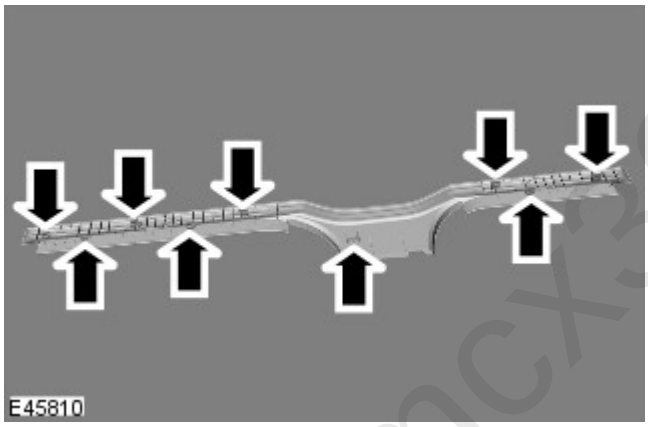

Installation

1. Install the scuff plate trim panel.
   - Install the clips.
   - Secure with the clips.
2. Attach the door weatherstrips.
3. Install the B-pillar lower trim panel.
   For additional information, refer to: B-Pillar Lower Trim Panel (501-05 Interior Trim and Ornamentation, Removal and Installation).

mcx30.com

Published: 11-May-2011

Interior Trim and Ornamentation - Headliner

Removal and Installation

Removal

1. Remove both A-pillar upper trim panels.
   For additional information, refer to: A-Pillar Trim Panel (501-05 Interior Trim and Ornamentation, Removal and Installation).
2. Remove both B-pillar upper trim panels.
   For additional information, refer to: B-Pillar Upper Trim Panel (501-05 Interior Trim and Ornamentation, Removal and Installation).
3. Remove both C-pillar upper trim panels.
   For additional information, refer to: C-Pillar Upper Trim Panel (501-05 Interior Trim and Ornamentation, Removal and Installation).
4. Remove both D-pillar upper trim panels.
   For additional information, refer to: D-Pillar Trim Panel (501-05 Interior Trim and Ornamentation, Removal and Installation).
5. Remove the front overhead console.
   - Carefully release the 7 clips.
   - Disconnect the 3 electrical connectors.

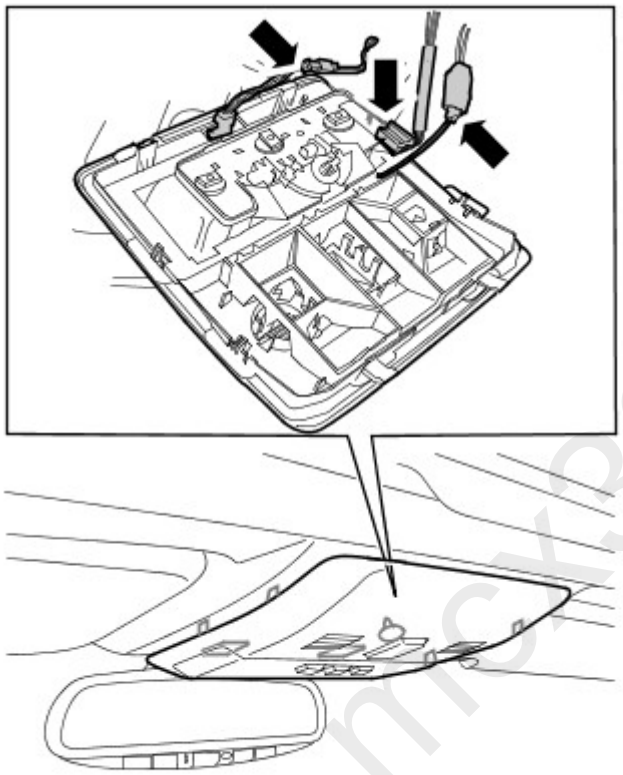

E50142

mcx30.com

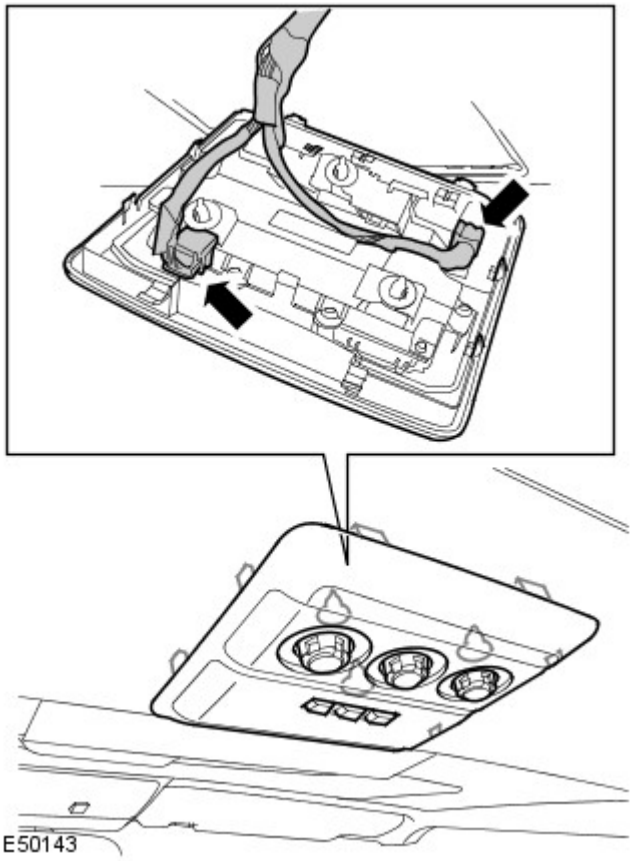

6. Remove the rear overhead console.

- Carefully release the 9 clips.
- Disconnect the 2 electrical connectors.

7. Disconnect the RH A-pillar electrical connector.

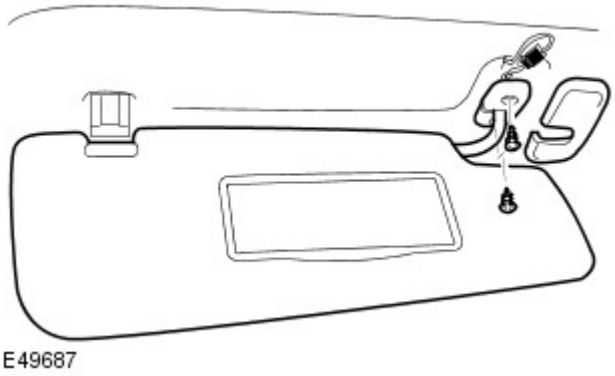

8. Remove the sun visor.

- Remove the cover.
- Remove the 2 screws.
- Release from the clip.
- Disconnect the electrical connector.
- Repeat the above procedure for the other side.

9. Remove the sun visor retaining clip.

- Release the screw cover.
- Remove the screw.
- Repeat the above procedure for the other side.

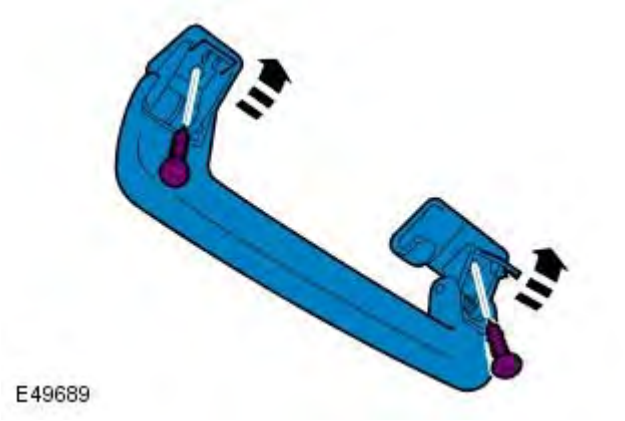

10. Remove the passenger assist handle.

- Release the 2 screw covers.
- Remove the 2 screws.
- Repeat the above procedure for the remaining 5 handles.

11. Position the front seats fully forward.

12. Position the rear seats fully forward.

13. Remove the rear headliner trim panel.

- Release the 7 clips.
- Disconnect the electrical connector.

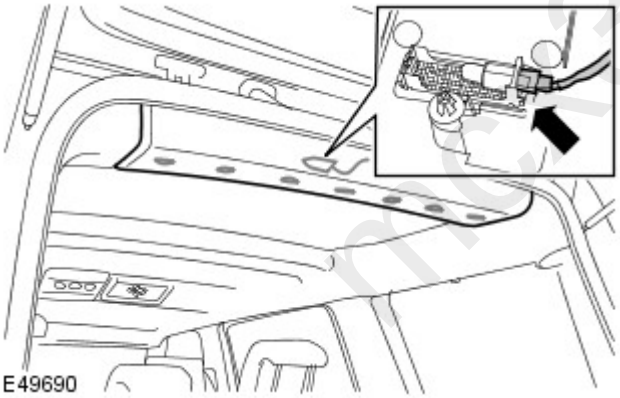

14. Disconnect the headliner wiring harness rear electrical connector.

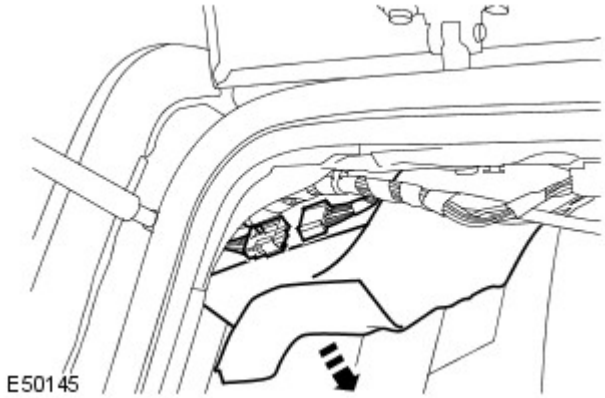

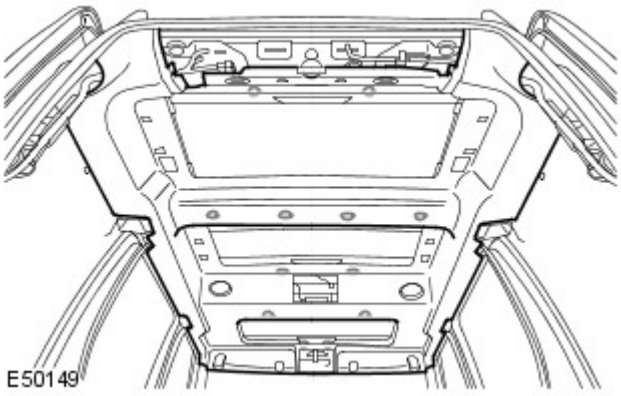

15. With assistance, carefully remove the headliner.

- Release the 14 clips.

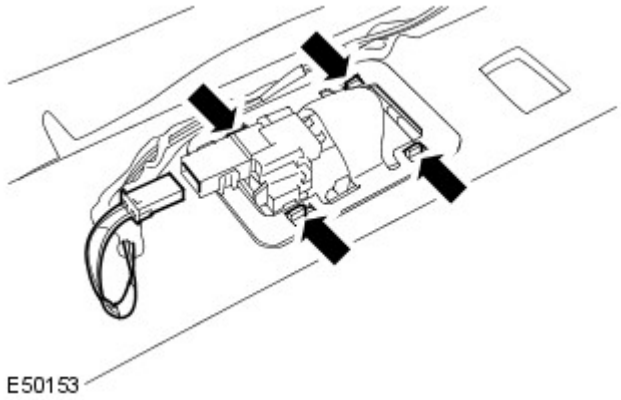

16. NOTE: Do not disassemble further if the component is removed for access only.

Remove the rear interior lamp.

- Release the clip.
- Disconnect the electrical connector.
- Repeat the above procedure for the other side.

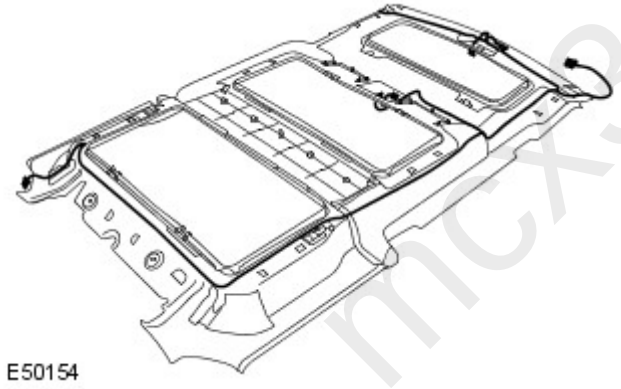

17. Remove the headliner wiring harness.

Installation

1. Install the headliner wiring harness.

- Secure the wiring harness to the headliner.

2. Install the interior lamp.

- Secure with the clip.
- Connect the electrical connector.
- Repeat the above procedure for the other side.

3. With assistance, carefully install the headliner.

- Secure with the clips.

4. Connect the headliner wiring harness rear electrical connector.

5. Install the rear headliner trim panel.

- Secure the clips.

mcx30.com

6. Reposition the rear seats.

7. Reposition the front seats.

8. Install the passenger assist handles.

- Install the screws.
- Secure the screw covers.

9. Install the sun visors.

- Install the clips.
- Install the screws.
- Install the screw covers.
- Connect the electrical connectors.

10. Connect the RH A-pillar electrical connector.

11. Install the rear overhead console.

- Connect the electrical connectors.
- Carefully secure the clips.

12. Install the front overhead console.

- Connect the electrical connectors.
- Carefully secure the clips.

13. Install both D-pillar upper trim panels.
For additional information, refer to: D-Pillar Trim Panel (501-05 Interior Trim and Ornamentation, Removal and Installation).

14. Install both C-pillar upper trim panels.
For additional information, refer to: C-Pillar Upper Trim Panel (501-05 Interior Trim and Ornamentation, Removal and Installation).

15. Install both B-pillar upper trim panels.
For additional information, refer to: B-Pillar Upper Trim Panel (501-05 Interior Trim and Ornamentation, Removal and Installation).

16. Install both A-pillar upper trim panels.
For additional information, refer to: A-Pillar Trim Panel (501-05 Interior Trim and Ornamentation, Removal and Installation).

mcx3.com

Published: 11-May-2011

Interior Trim and Ornamentation - Loadspace Trim Panel RH

Removal and Installation

Removal

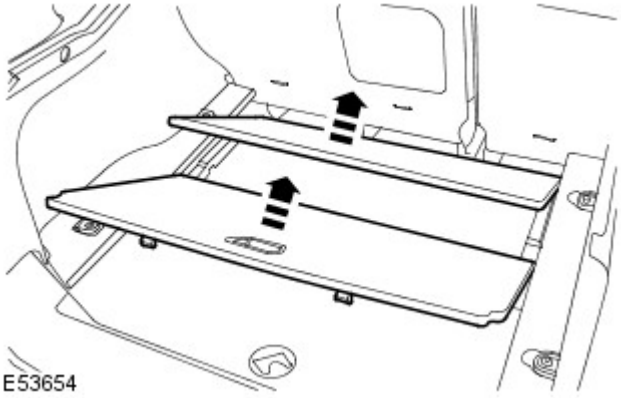

1. Remove the loadspace floor panels.

- Lift and remove the front panel.
- Lift and remove the rear panel.

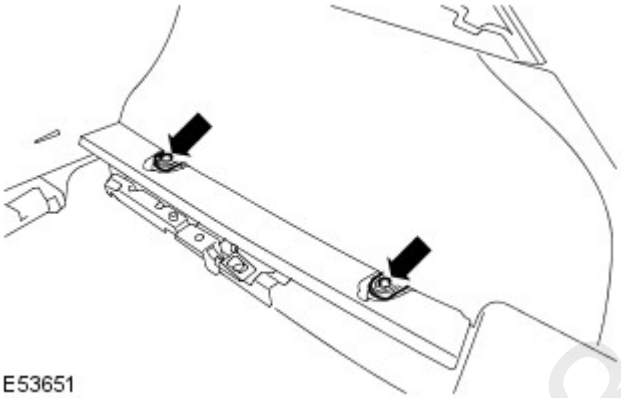

2. Remove the loadspace compartment anchors.

- Remove the bolt.
- Repeat the above procedure for the other anchor.

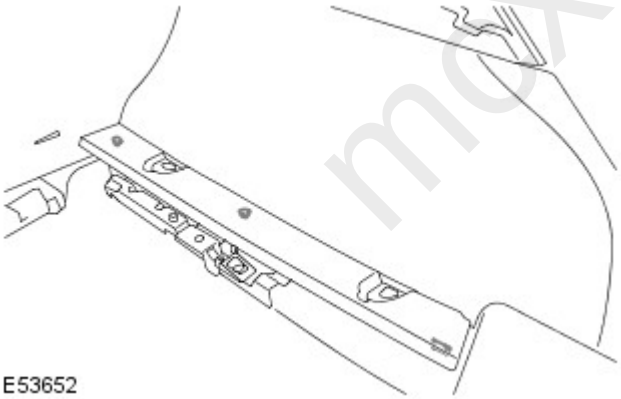

3. Remove the loadspace trim panel.

- Release the 3 clips.

4. NOTE: Do not disassemble further if the component is removed for access only.

- Remove the 2 clips.

Installation

1. Install the clips.
2. Install the loadspace trim panel.
   - Secure the clips.
   - Position the locating pegs.
3. Install the loadspace compartment anchors.
   - Position the locating peg.
   - Tighten the bolt to 25 Nm (18 lb.ft).
   - Repeat the above procedure for the other anchor.

mex30.com

4. Install the loadspace floor panels.

mcx30.com